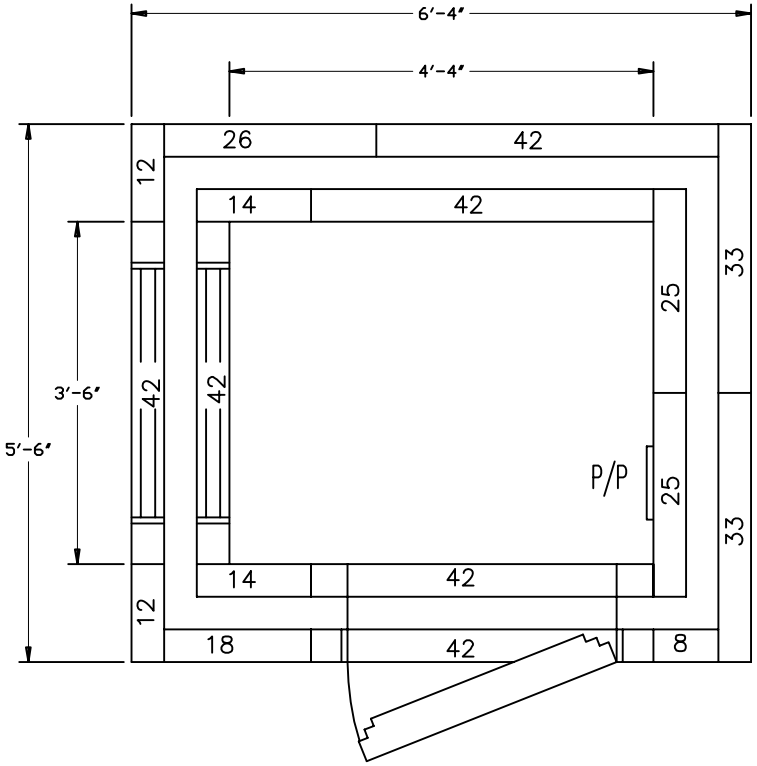

120A-1-RHR

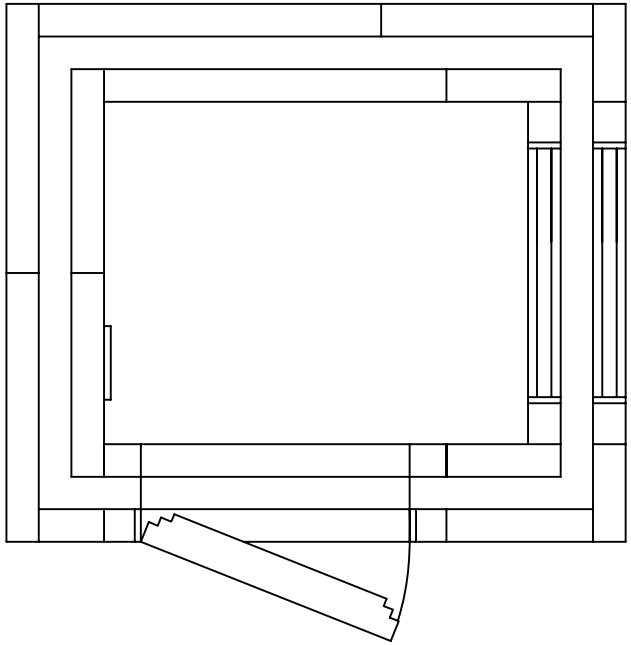

120A-1-LHR

ISSUE	DATE	BY	DESCRIPTION OF ISSUE
A			

THIS DESIGN AND DRAWING IS THE EXCLUSIVE PROPERTY OF THE INDUSTRIAL ACOUSTICS COMPANY, INCORPORATED, AND IS SUBMITTED AS CONFIDENTIAL INFORMATION IN CONNECTION WITH YOUR INQUIRY. IT MUST NOT BE USED FOR ANY OTHER PURPOSES, NOR CAN IT BE COPIED OR LOANED WITHOUT WRITTEN PERMISSION.
UPON REQUEST IT MUST BE RETURNED IMMEDIATELY.

iac

ACCUTONE2 120A SERIES AUDIOMETRIC BOOTH

INDUSTRIAL ACOUSTICS COMPANY
1160 Commerce Avenue • Bronx, NY 10462

MODEL and PART ID
120A-1-LHR or RHR

JOB No.

ISSUE
A